OPEN FRAME | AOC SERIES

Item Code OFAA-2152-50AK

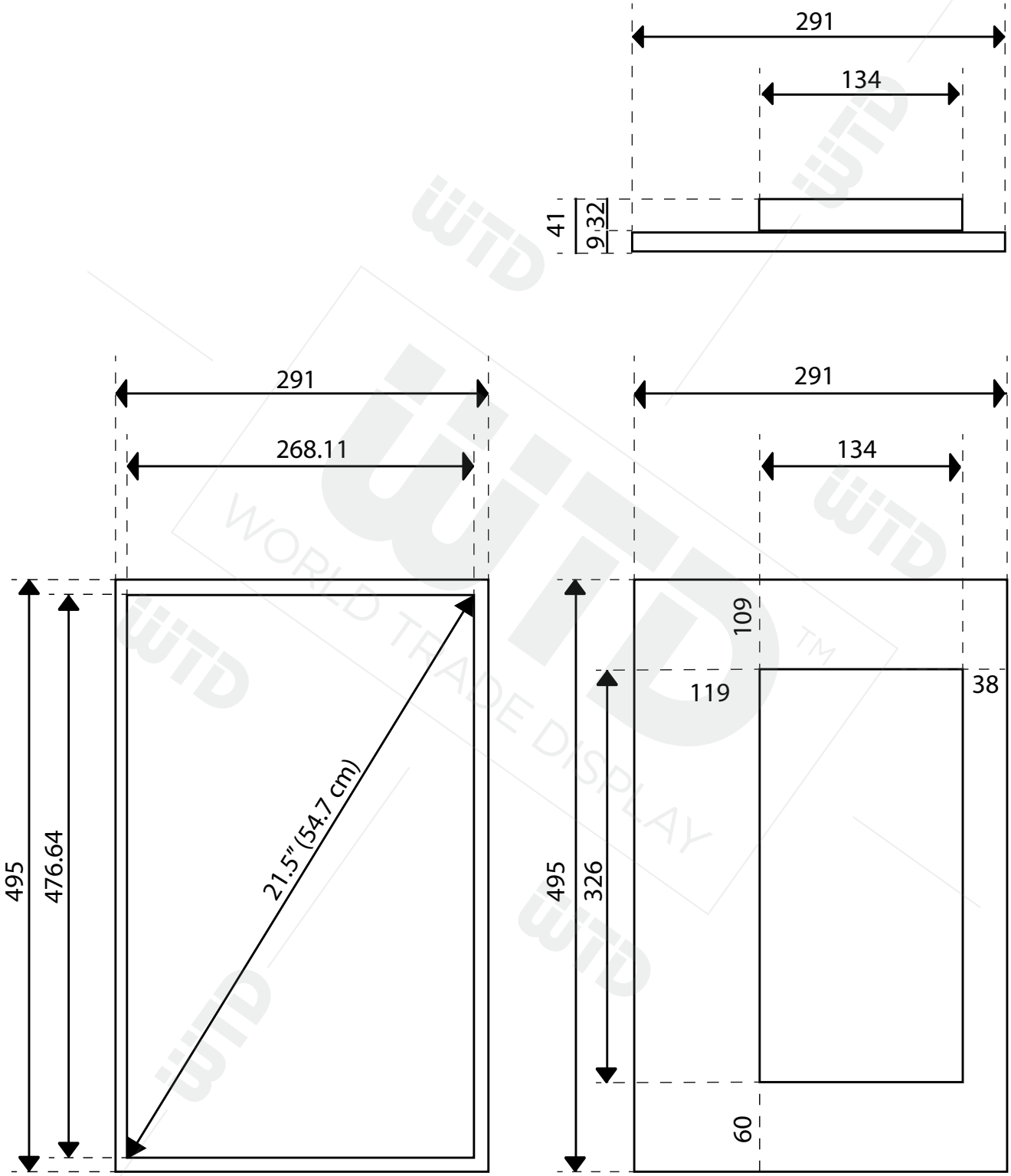

Tolerance ±1mm

World Trade Display reserves the right to change or update, without notice, any information contained herein; to change, without notice, the design, construction, materials, processing or specifications of any products; and to discontinue or limit production or distribution of any products. WTD, World Trade Display it's a registered trademarks of World Trade Display Srl. All other trademarks are the property of their respective owners. Copyright World Trade Display Srl. All rights reserved.